Enhancing water use efficiency through promotion of water saving technologies and capacity building of water users in drought prone area, Ichak and Churchu blocks, District Hazaribag, Jharkhand

Supported by

India Water Partnership (IWP)

&

Institute for Studies in Industrial Development (ISID)

Report Prepared by

AFPRO

Action For Food Production

AFPRO FIELD UNIT IV

H. No. 262, Road. No. 1-C,

Ashok Nagar, Ranchi-834002

Phone: 0651-2244871, 2241947

CONTENTS

ACKNOWLEDGEMENT

AFPRO expresses its sincere gratitude to the India Water Partnership, New Delhi for all the support it has rendered towards the research study on "Enhancing Water Use Efficiency through Promotion of Water saving technologies and capacity building of water users in drought prone area, Ichak and Churchu Block, District. Hazaribagh, Jharkhand".

We thank the community for its co-operation and support.

Our sincere thanks to Dr. Veena Khanduri, Executive Secretary, India Water Partnership for time to time support.

1. EXECUTIVE SUMMARY

The State of Jharkhand is endowed with vast and rich natural resources mainly those of minerals and forest. 80% of its population residing in 32620 villages depends mainly on agriculture and allied activities for their livelihood. Agriculture is the main stay for the 80% of rural population of the state. Agriculture is their employment and primary income generating activity. The agricultural economy of the Jharkhand state is characterized by dependence on nature, low investment, low productivity, mono-cropping with paddy as the dominant crop, inadequate irrigation facilities and small and marginal holdings. The dependence of agriculture on the Vagaries of the rain-god can be gauged from the fact that as much as 90% of the total cultivated area is unirrigated.

Despite the fact that the state has a good rainfall, the surface water availability for agriculture is not sufficient due to inadequate storage facilities etc. As far as the status of ground water is concerned, it is also in the poor state due to little recharging of ground water by natural process in absence of artificial recharging facilities; as a result, the water level in the plateau is going down. This situation raises serious implications on food security for the state. If agricultural production in the low-income poor community of the Jharkhand state is adversely affected, the livelihoods of large numbers of the rural poor will be put at risk and their vulnerability to food insecurity increased.

Timely availability of irrigation to the crop makes difference in good growth and overall agriculture productivity. At the same time, failure of monsoon or non availability of irrigation facilities affects badly to farming community and ultimately leads to food shortage and poverty trap.

For all round agricultural development, technology must be supplemented by institutional mechanisms to ensure the provision of the essential facilities and services that the farmers need to improve agronomic practices and obtain higher yield.

In this context we planned for capacity building of the users group in the field of improved cultivation practices and water saving technology along with water sharing mechanism in eight villages in Ichak and Churchu blocks of District Hazaribag, Jharkhand. In these villages, flow irrigation systems have been constructed for which users group have been constituted for better maintenance and sustainability of the system as well as for crop planning and water sharing mechanism. Four villages are in Ichak block and the other four villages are in Churchu block, district Hazaribagh, Jharkhand. The selected blocks are characterized by undulating terrain and the region is bestowed with a large number of streams and springs scattered all around the state. The undulating topography provides an opportunity to tap the perennial source of water (stream/ rivulet/spring) at the upper reaches of land and divert through channels or pipes so that by gravity flow the water can be transported to the agriculture fields for irrigation purpose.

The present project "Enhancing water use efficiency through promotion of water saving technologies and capacity building of water users in drought prone area, Ichak and Churchu blocks, District Hazaribag, Jharkhand" intended to strengthen the users group already in place for the different irrigation structures constructed under the said project through a variety of training programmes and exposure visits during the period March 2010 to August 2010.

Project villages: Eight villages have been identified for capacity building of the users group in the field of improved cultivation practices and water saving technology. In these villages, flow irrigation systems have been constructed for which users group have been constituted for better maintenance and sustainability of the system as well as for crop planning and water sharing mechanism. Four villages are in Ichak block and the other four villages are in Churchu block, district Hazaribagh, Jharkhand.

The details of the users group along with villages are as given below:

S.N.	Name of village	Block	No. of members in user group
1.	Uruka	Ichak	45
2.	Sijhuwa	Do	35
3.	Karimati	Do	52
4.	Simra	Do	36
5.	Lothe	Churchu	35
6.	Jamdiha	Do	23
7.	Chanaro	Do	17
8.	Chanaro Parwad	Do	26
	Total		269

Under the present project, it was planned to build up the capacity of the user's group members for **water sharing mechanism and efficient use of irrigation water** in distress condition. Several training programmes and exposure visits were organized to build up the capacity of the users group on various aspects of improved agriculture, irrigation techniques, crop planning and water sharing mechanism. In all these programmes sustainability of the system was discussed and ways discussed to achieve it.

It has been observed that the trainings imparted were really successful in motivating the community towards the promotion of SRI system of paddy cultivation and the water sharing mechanism and efficient use of irrigation water in distress condition. The impact of SRI has been readily observed. However, due to existing drought condition in the state, the condition of agriculture is very poor in terms of the net cropped area due to shortage of irrigation water. The users groups are in place and have been strengthened by this programme.

2. The details of the trainings imparted to the users group are as given below:

I. Training for user's group members:

To build up the capacity of the users group to operate and maintain the system properly, one day training programme was held on 23.04.2010 at Ichak on efficient use of Irrigation water & sustainability of the system. This training was organized by AFPRO with the help of Manav Vikas. Trainers for this training were Mr. Minu Mahto (Awarded by Jharkhand Govt for best farmer), Mr. O.P. Mishra (Weir Crop Science Company), Mr. Anil Saini (Afpro-Ranchi) & Mr. Birbal Prasad (Manav Vikas-Ichak). The topics covered under training are as below:

(A) Water requirement of different crops. From the practical point of view, there are three major aspects of irrigation management (i) when to irrigate? (ii) How much water to be applied to crop for each irrigation? (iii) How best to irrigate? The amount of water to be applied for each irrigation will depend on the root zone depth, soil depth, salt content in the soil & water deficit before irrigation. The most important factor for production is growth stages in relation with irrigation. Growth stages of different crops in relation to irrigation is as given below:

I. Growth stages of paddy crop:

1. Seedling in nursery (after 15 days of sowing)
2. Seedling at transplanting (after 21 days of sowing)
3. Initial Tillering (10-20 days after transplanting)
4. Maximum Tillering (20-30 days after transplanting)
5. Jointing (30-50 days after transplanting)
6. Booting (50-60 days after transplanting)
7. Flowering (60-70 days after transplanting)
8. Grain development (70-80 days after transplanting)

Drainage needs for Paddy: when continuous land submergence by ponding is practiced, it is necessary to drain the soil either through horizontal (surface) or through vertical (sub-surface) drainage. Once or twice drain is required during the growth period, especially on poorly drained clayey soil having the rate of percolation less than 2.5 mm/days. This practice is beneficial in removing the toxic submergences such as sulphides developed under reduced conditions & in supplying oxygen to the root system. This practice of drainage results in higher yields.

II. Growth stages of Wheat crop:

1. Crown root initiation stage (20-25 days after sowing)
2. Tillering stage (40-45 days after sowing)
3. Jointing stage (55-60 days after sowing)
4. Boot/Flag leaf stage (70-75 days after sowing)
5. Flowering stage (85-90 days after sowing)
6. Milk stage (100-105 days after sowing)
7. Dough stage (115-120 days after sowing)

The most critical stage in wheat crop is (i) Crown root initiation stage (20-25 days after sowing) (ii) Second critical stage is Tillering (40-45 days after sowing) (iii) Third critical stage is flowering (80-85 days after sowing). Delay in irrigation or insufficient irrigation during these stages will most adversely affect the production.

III. Growth stages of Maize crop:

1. Seedling stage (14-16 days after sowing)
2. Tasselling stage (45-55 days after sowing)
3. Silking stage (70-75 days after sowing)

If we delay the irrigation in above stages, it directly affects the production.

IV. Growth stages of sorghum crop: The initial seedling & flowering critical stages most important for sorghum crop.

1. Initial seedling stage (15-30 days after sowing)
2. Pre-flowering stage (84-100 days after sowing)
3. Grain formation stage(105-120 days after sowing)

V. Growth stages of Barley crop: If our land is loamy soil then only two irrigation, one at initial Tillering (about 30 days after sowing) & second one initial flowering stage (about 80 days after sowing) is sufficient for better production. There are mainly three stages during the growth of barley crop which is given below:

1. Tillering stage(30 days after sowing)
2. Jointing stage (60 days after sowing)
3. Flowering stage (about 80 days after sowing)
4. Milk stage (95 days after sowing)

VI. Growth stages of Gram crop: Two most important stages for Gram crop (i) pre flowering stage (45 days after sowing), (ii) Flowering stage (70 days after sowing).

Water requirement, Irrigation interval & depth of water in each application for different crops

S.No	Name of crop	Duration in days	No of watering (recommended)	Irrigation interval in days	Depth of water in each application in cm
1	Paddy	100-150	8-10	10-15	10
2	Wheat	150-180	4-6	15-20	7
3	Maize	120-135	8-10	20-30	5
4	Vegetable	120-150	10-12	10-15	5
5	Bajra	120-150	3-4	20-25	7.5
6	Gram	150-195	2-3	20-25	5
7	Fodder	150-180	5-6	20-30	5
8	Sugarcane	330-540	30-40	10-15	10
9	Tobacco	150-180	6-7	10-15	5
10	Cotton	120-165	6-7	10-15	7.5
11	Ground nut	180-225	30-35	10-15	6

(B) Operation & Maintenance for sustainability of irrigation system: The important points discussed are as given below:

1. The most important factor for the sustainability of the system is ownership of the system. If user group members accept the ownership of the system heartily then the system would be sustainable.
2. Form WUG for better water sharing & sustainability of the system.
3. Fund raising for repair & maintenance of the system for future – It was explained that the users or the beneficiaries of the system should try to develop some fund of their own by which they could maintain the system properly in case of any damage requiring repair without waiting for any external help.

4. Bank account open for repair & maintenance fund – The fund raised by means of contribution from the members of the users groups should be deposited in a bank account opened for the purpose.
5. Active participation of the WUGs members is must for the sustainability of the system.
6. Make some rules for sharing of water for water users members like equal distribution of water, sowing crops having the same / similar water requirement, cultivating equal land etc.
7. The fund collected from water users as a service charge in lieu of irrigation being provided to the respective members land.
8. Proper maintenance books of a/c & transparency is must.
9. Every year clean the system after use in respect of Drip & sprinkler irrigation system.
10. All connection should be correct in quick coupling pipe.
11. Coupling & rubber seal ring should be clean.
12. Service & installation procedure in respect of the pump & power unit should be strictly observed.
13. Delivery valve closed after stopping the power unit.
14. The pipe & sprinkler line are shifted as required after stopping.
15. Water should be clean for drip & sprinkler system.

(C) Importance and need of crop planning for user groups: The existing practice in the area is that the farmers do not do any planning for the crop to be grown & no analysis of the present situation of resources & the requirement is being made, as a result the farmers get very low production. Farmers normally grow their crop as per his neighborhood farmers.

If every farmer planned every year their cropping plan season wise & think how to get more production from available resources, than they can get more production from available resources. Some important points that should be considered before planning to cultivate any particular crop are as given below:

1. Available land type* should be considered - Classification of the land as per depth of soil like Deep soil, daun-1, daun-2 & tand soil.
2. Also classification of soil as per loam, sand, clay & others
3. Availability of resources should be considered.

4. Water available for irrigation / depend on rainfall.
5. Include all types of crop in planning like Cereals, pulses & oilseeds.
6. Types of variety, duration of variety, how much water is required – all these factors should be considered.
7. The main crop grown in the area is paddy. Hence the following factors should be considered in the cultivation of paddy
   i. Long duration variety (130-150 days) like mansari sowing in no-1 land.
   ii. Medium duration variety (120-125 days) like IR-64 sowing in Daun-1 land
   iii. Short duration variety (100-110 days) like IR-36, lalit in Daun-2 (shallow) land
   iv. Maize sowing in tand land.
8. Farmers should try to use system of rice intensification (SRI) - new technology of paddy & hybrid variety as per available land & water because hybrid variety requires less water & give high production.
9. Hybrid variety for paddy recommended as per type of land:
   i. For No-1 land – Arize-6444 (130-140 days duration)
   ii. For No-2 land(daun-1) – Arize Tej (120-125 days duration)
   iii. For No-3 land(daun-2) – Arize-6129 (100-110 days duration)
10. For tand land the farmers may plan– Bajra, Jawar, & after Rabi crop – tomato.
11. For red shallow soil – maize, potato, ground nut & sweet potato.
12. Deep soil (no-1) – After paddy crop grow mustard, gram.
13. In rainy season sowing N-53 variety (Nafed) of onion crop for more benefits.
14. Hybrid variety for maize – 4212 for grain (90 days) & for bhutta- 65 days. This variety sowing after first rain.

Note: No.1 land is the valley portion of the land which is having enough water holding capacity, the upper most part of the land is called as tand. In between there are Daun 1 and Daun 2 types depending upon their location.

15. Hybrid variety for tomato- Laxmi-5005 (Nunhams) , 017 (Cinjenta) & Rohit -2

Difference between hybrid & desi variety as per requirement (Paddy)

S.No	Particulars	Hybrid Variety	Desi Variety
1	Seed Rate	6 kg/acre	30-40 kg/ acre
2	Transplanting (Ropa)	After 20-25 days	After 30-40 days
3	No of plants for Ropa	Only one plant at one point	2-3 plant at one point
4	Plant in one sqm	25-30 plant	50-60 plant
5	Plant to plant distance	15 cm	Not fixed
6	Line to line	20 cm	Not fixed
7	Production	High	Low

K_2O (Potash) fertilizer @ 20-25 kg/acre at the time of transplanting in hybrid variety is good for obtaining better production.

(D) Technologies available for water saving like drip & sprinkler irrigation system for better production:

i. Drip Irrigation system:

1. The system applied water slowly to keep the soil moisture within the desired range for plant growth.
2. Minimizing such conventional losses as deep percolation, runoff & soil water evaporation.

3. Most efficient & popular in area with water scarcity & salt problem.
4. The initial cost of the system considered to be limitation for large scale adoption.
5. Economic consideration usually limits the use of drip irrigation system to orchards & vegetable in water scarcity area.
6. Cost of the unit per hectare depends mainly on the spacing of crop.
7. For widely spaced crops like fruit trees the system may be even more economical than sprinkler system.
8. Use in crops like grapes, sugarcane, papaya, banana, guava, other fruit tree & vegetables. Also used in cotton, chilli etc.
9. The drip irrigation system reduces salt concentration in the root zone.
10. Drip irrigation system can achieve 90-95 % efficiency.
11. The total amt of water used is less than the water requirement for the whole area.
12. Line pressure very less than that in the sprinkler system.
13. Improved crop yield & quality.

ii. Sprinkler irrigation system:

1. Used for almost all crops except rice & jute.
2. Used for almost all types of soil except heavy clay soil.
3. This method is best suited for sandy soil that have high infiltration rate.
4. Soil too shallow to be leveled properly for surface irrigation method can be irrigated safely by sprinkler system.
5. Especially suitable for steep stapes or irregular topography.
6. The amt of water can be controlled to meet crop needs & light application can be made efficiently on seedling & young plants.
7. Soluble fertilizer, herbicides & fungicides can be applied in irrigation water economically & with little extra equipment.
8. Sprinkler irrigation can be used to protect crops against frost & high temperature.
9. Labour cost usually less than for surface method on soil having a high infiltration rate & on steep roller land.
10. Wind distorts sprinkler irrigation & causes uneven distribution of water.
11. Ripening soft fruit must be protecting from the spray.
12. Water must be clean & free from sand, Debris & large amt of dissolved salt.
13. Power requirement are usually high.
14. Some % of water lost by evaporation & wind drift increases.

II. Training for users group members on SRI and compost preparation:

One day training on SRI technique and preparation of organic compost was held on 02/06/2010 in the Manav Vikas conference hall. 50 farmers from the project villages- participated in the training program. Mr O.P Mishra (Agriculture Scientist) of BAYER was the resource person.

Brief of the Method of Sri Cultivation Discussed By Resource Person:-

- Any variety suited to the locality (except deep water rice).
- Treat seed with Pseudomonas flourescens for one hour and shade dry

- Spread a polythene sheet
- Spread 1.5 inch layer of Soil + Sand + Farm Yard Manure mixture uniformly
- Soak paddy seed overnight in water
- Spread seeds uniformly and cover with a thin layer of sand followed by some straw
- Transfer the 12 day old seedlings with soil undisturbed to small trays/ banana plant.
- Plough twice to fine tilth
- Puddle and level and add Organic manure
- Final Leveling using wooden planks and plastering field bunds
- Drain the field completely and after a few hours mark rows and columns using a marker (may be hand made.
- Plant seedlings at a depth of 1.5 cms on the days it was removed from the nursery
- Use a plant spacing of 25x25 cms
- Maintain moisture but no standing water.
- Weed using a weeder on the 10 day after transplanting
- Remove manually all weeds not reachable by the rotary weeder
- Repeat weeding in 10 days interval as much as possible
- Apply fertilizers as usual
- Control pests and diseases if threshold level is reached

Benefits of SRI:

• **Increased tillering**, with 30-50 tillers per plant, 80 to 100 possible, and sometimes even more from a single plant.

• **Greater root growth**, with 5-6 times more force required to uproot an SRI plant than to pull up one conventionally grown

• **Increased grain filling.** Panicles are larger as well as more numerous.

• **Higher grain quality and greater grain weight**.

• **Water savings -** Water requirements with SRI are usually reduced by about half since paddies are not kept flooded during the entire crop cycle.

• **Fewer pest and disease attacks**.

• **Seed savings -** Because many fewer plants are grown, the seeding rate is only 5-10 kg/ha.

• **No need for chemical fertilizers.**

• **Lower costs of production**.

Mr.Mishra also informed the farmers about the new seed dropping machine that has come in the block office. He told the farmers that the machine can be obtained by paying Rs 1000 as security deposit which is refundable once they will return back the machine after the completion of the work. He too informed the farmers about the new hybrid seed that is available in the block office. The session was very interactive as questions were raised from the participants. One of the participants from Mandu named Mr. Basudev Soren asked Mr. Misha about the quantity of paddy production through this technique. Mr.Misha answered as follows:

Type of land	Production through SRI	Production through Non SRI
No.1 Land	30-40 Quintals	10-12 Quintals
No.2 Land	25-30 Quintals	08-10 Quintals
No.3 Land	20-25 Quintals	05-07 Quintals

Mr. Sitaran Mehta from Darha raised the question on the best variety of HYV to grow Maize. In reply Mr. Misha said at 4212 is available in the market which is considered to be the best. He also suggested some medicines to protect crop. *REGENT* is good medicine to protect Maize, Brinjal and Tomato from insects. *SPARK* is used to protect crop from soil based insects.

COMPOSTING: Mr. Mishra explained the importance of compost as follows:

Why composting is necessary?

- It is environment friendly
- It is good for soil health. It improves the soil fertility
- It reduces the cost incurred in chemical fertilizers
- It contains all the essential micro nutrients for plant growth

He explained the method of preparation of NADEP compost pit:

- A brick structure measuring 10'x6'x3' is prepared with holes in the side walls to ensure adequate supply of air during composting.
- The brick tank is filled with farm wastes, soil and cow dung and water is added to maintain moisture.
- Upper layer is plastered with soil and dung mixture.
- Compost becomes ready for use within 110-120 days. One tank provide about 2.5-2.7 t of compost sufficient for one hectare land.
- The cost of construction of the tank with brickwork in cement mortar and light thatched roof has been estimated at approximately Rs.4500/- per unit.

Mr. Birbal (Secretary of Manav Vikas) conducted training on organic pesticide preparation. He discussed on the importance of Organic compost. He told the farmers that the demand for agricultural products grown by the organic farming method will increase in the future because the crops grown by this method are more nutritious, safe and full of energy as they are grown by natural process. He demonstrated the process of preparing and organic pesticides. Mr.Prasad told that in order to prepare organic pesticide, 5 Kgs of tobacco trunk has to be soaked in 10 liters of water for 24 hours, thereafter the water is separated out from the tobacco trunk and is sprinkled on the crop plants. This protects the crop from getting infected. Through the same process we can use *neem and karanj leaves* instead of tobacco to prepare organic pesticides. Apart

from the above he also taught the method of growing rainy season crops like onion and *brokali.* He explained the method to prepare organic liquid composition by boiling neem leaves with cow urine. If the composition is sprinkled on the crops then the crops will remain protected from infections.

At the end of the session Mr. Mishra and Mr. Birbal wished everyone good luck and prosperity for the coming monsoon season and told everyone to make this season the most productive of the year.

III. Training for users group members on SRI for paddy crop:

Improvement in irrigation and capacity building of the users group is very important aspect of the project. In this context follow up training on building the capacity of the users group to operate and maintain the system properly and efficient use of irrigation water was conducted on 25th June 2010 at Hazaribagh for the users groups of the eight villages in which the project on Diversion based irrigation system is going on presently.

Initially a discussion on water use efficiency and requirement of water for different crops was initiated with the farmers. The farmers were of the opinion that our being a rain fed area and paddy being the main crop, can they be exposed to system through which they can maximize paddy yields while also reducing the water requirement. The group was then shared about the System of rice intensification. Along with this there was also discussion on sustainability of the system.

The trainers for this training were Mr. Sharat Singh (SPWD) and Mr.Ajit Kumar (AFPRO)

(A) Steps to be taken by farmer for cultivation of paddy through SRI method:

The principles of SRI technique and how these principles increase the crop productivity were explained. All these were explained through examples pertaining to their own life which created interest among the farmers.

i. First thing that was told was that SRI is only a method of cultivating paddy and any variety of paddy can be cultivated by this method. It is a variety neutral system of paddy cultivation which increase yield, while it reduces seed rate, water requirement. It also increases the water productivity water use efficiency.

ii. Firstly the most important step for cultivation of paddy (as a matter of fact, for any other crop too) is the selection of good seed. He explained seed sorting, wherein the brine water test for seed sorting was shared with the farmers.

iii. It was shared that in fresh water vessel a potato/egg is placed. It is seen that the egg/potato settles in the bottom of the vessel/bucket. Thereafter the egg/potato is removed and salt is added to water as the concentration of salt increases slowly the potato floats in the water. In this brine water seeds are placed and the seeds which settle at the bottom are to be used for cultivation.

iv. The seed rate for SRI paddy is 2kg per acre. Which is very less compared to the traditional method (where 40-60 kg is used)?

v. For reducing the disease/pest attack on seeds we should use fungicide carbendazim powder(2 gm per kg of seeds only)

vi. The seeds are to be spread thinly on seed beds prepared for raising nursery. The raised seed bed should be prepared with high quantity of Farm yard manure.

vii. The other important principle is to utilize the vigour of younger seedlings. (this facilitates prolonged and profuse tillering). The nursery should be transplanted at an early age of 8-12 days.

viii. Main field preparation, application of green manure, basal dosages of potash application was also told to the farmers. It was suggested that for appropriate fertilizer application dosage the farmers should get the soil tested for ascertaining the present nutrient status.

ix. The other important principle is to avoid trauma to roots by quick and shallow planting. The nursery should be very carefully extracted from the seed bed with the root and the adjoining soil intact and quick and shallow transplantation should be done at square grids having row to row distance of 25cm and column to column distance of 25 cm. In case of varieties with shorter duration the spacing should be

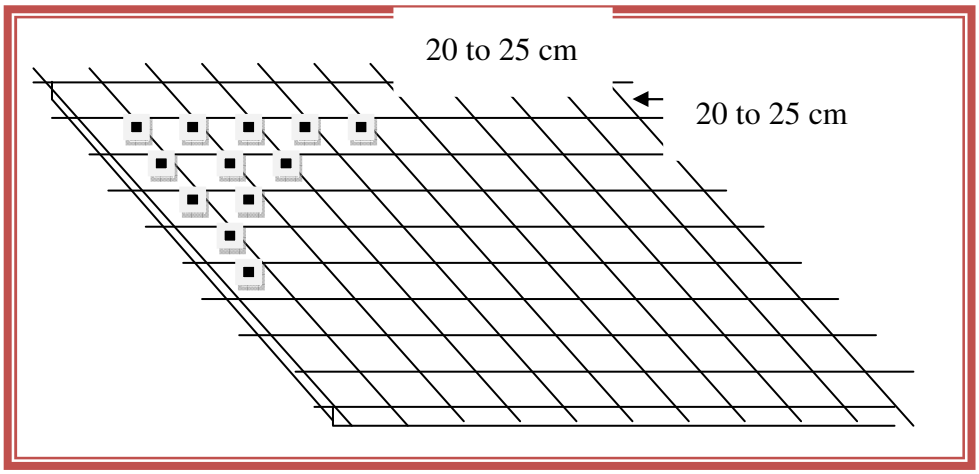

20X20 cm.

x. The next important principle is wider spacing to facilitate better plant and root growth. The spacing is as mentioned above.

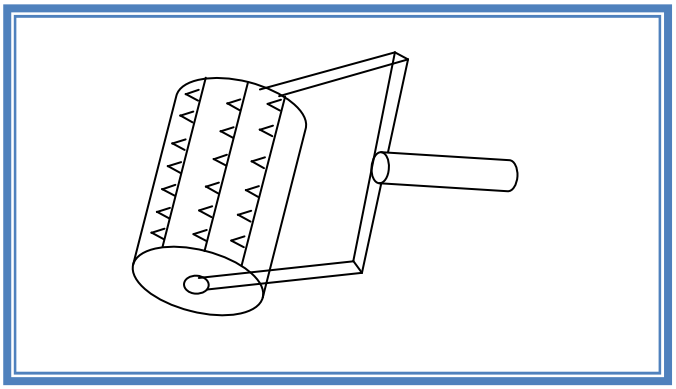

xi. An important principle is efficient water management. The fields are not flooded with 4-5 inches of water as normally practiced in the region. Instead the preferred mode is to alternately wet and dry the field. Since in rainfed paddy this is not possible so the practical approach will be to keep a very thin layer of water maybe 1 inch or even less in the soil and in case of water stress we need to irrigate only till field capacity.

xii. Trainer also gave more stress on FYM/organic manure rather than urea. Fertilizer may be cow dung (**Farm yard manure**) because after the use of urea on field plant need more water for its absorption.

xiii. The next important principle is mechanical weeding using rotary weeders. It helps in soil aeration and also incorporates weeds into the soil. There are various types of weeder like Cono weeder, Japanese paddy weeder and mandava weeder. A rough sketch of the mandava weeder is as shown adjacently.

(B) Operation & Maintenance for sustainability of irrigation system: The important points discussed are as given below:

i. The construction of structures is almost complete. Now the time has come to take the benefits in terms of irrigation water for their crops. Water users group is already formed. The need is to actively participate and make the system a success through joint efforts.

ii. Now the question arises as to how the sharing of water would be done, how the crop planning would be done based upon the availability of water. It was suggested to formulate some rules for sharing of water for water users members like equal distribution of water, sowing crops having the same / similar water requirement, cultivating equal land etc.

iii. The most important factor for the sustainability of the system is ownership of the system. If user group members accept the ownership of the system heartily then the system would be sustainable.

iv. Fund raising for repair & maintenance of the system for future – It was explained that the users or the beneficiaries of the system should try to develop some fund of their own by which they could maintain the system properly in case of any damage requiring repair without waiting for any external help. This find can be collected in lieu of irrigation being provided to the respective farmer.

v. Bank account open for repair & maintenance fund – The fund raised by means of contribution from the members of the users groups may be deposited in a bank account opened for the purpose

vi. Active participation of the WUGs members is must for the sustainability of the

vii. Proper maintenance books of a/c & transparency is must

IV. Practical training on SRI:

Based upon the interest shown by the farmers during the training programme arranged on 25th June 2010 for adopting the SRI method of paddy cultivation, we planned to provide field training to the farmers on practical aspects of the various aspects of the SRI system. Thus two field trainings were held – The first one on 10th July 2010 and the second one on 15th July 2010. The trainer for this training was Mr.Sharat Singh from SPWD Ranchi and Mr. Ajit Kumar from AFPRO Field Unit IV, Ranchi

The process of seed sorting and nursery preparation was demonstrated as given below:

		
i. First of all a bucket full of water was taken. Then a potato was immersed in it. The potato settled at the bottom of the bucket.	ii. Then common salt was added to it till the potato starts floating in the water.	iii. In this solution, 2 kg paddy seed was put. It was observed that some of the paddy seeds were floating on the surface while the rest settled at the bottom.

		
iv. The seeds that were floating were removed and the seeds that settled at the bottom were the good quality seeds that were to be used for sowing.	v. The next step was to wash the selected seeds three to four times with normal water so that the salt content is removed.	vi. This seed was then put in a wet jute bag. Then Bavestine powder (systemic fungicide) was applied to the seed @2gm per kg of seed.
		
vii. This seed was then to be kept for 24-48 hours. The jute bag should be kept wet by sprinkling water from time to time. At the mouth opening stage that is just before sprouting stage after 24-48 hours in the jute bag it should be broadcasted in the nursery.	viii. The size of the nursery should be 20feet by 20 feet for 2 kg of seed. The nursery bed should be about 6inches above the ground level.	ix. Drainage should be left to facilitate the passing of water through the beds. The raised seed bed should be prepared with high quantity of Farm yard manure.

x. The 20'x20' plot was to be divided into four units, each of size 20'x5'.
xi. The seeds should be sown in each plot @ 0.5 kg per plot.
xii. The seeds should be covered with a thin layer of compost. If compost is not available, saw dust or farm yard manure should be applied. Thereafter it should be covered with straw.
xiii. The seed bed should be kept wet.
xiv. The seedlings would be transplanted to the fields after about 10-12 days.
xv. The nursery should be very carefully extracted from the seed bed with the root and the adjoining soil intact and quick and shallow transplantation should be done at square grids having row to row distance of 25cm and column to column distance of 25 cm

3. Exposure visit to Krishi Vigyan Kendra, Hazaribagh:

In the month of August 2010, it was planned to arrange an exposure visit to the farmers to a site where they can get a first hand exposure to the fields of SRI, drip and sprinkler irrigation systems, compost pits and better management of crop planning and water management techniques. With this in view, the exposure visit was conducted on 31st August 2010 to the Krishi Vigyan Kendra, Hazaribagh

Exposure visit to Krishi Vigyan Kendra, Hazaribagh: The exposure visit was conducted on 31st August 2010 to the Krishi Vigyan Kendra, Hazaribagh. The farmers got the opportunity to see the fields of paddy cultivated through the SRI system. They were delighted to see the status of the plants. As per the farmers, there was a lot of difference between the traditional and the SRI system of the paddy cultivation. They found that the growth of the plants was much superior to the plants grown through the normal process. It was explained by the Resource person, Mr.S.N.Chowdhary that the results are clearly different in the SRI and the non SRI plots.

Users group members visiting the farm at Krishi Vigyan Kendra, Hazaribagh

After the visit to the SRI fields, there was a brief session on the necessity of water management and crop management. The main points discussed were as given below:

It was explained that one of the main factors in the agricultural production is availability of irrigation water. In the context of Jharkhand where the irrigation potential is mere 8% of the total agricultural area, it becomes very important to manage the available water properly so as to get the maximum benefit.

Regarding selection of crop and alternative crops, it was explained that wheat consumes more water than say, gram. With the same quantity of water available for irrigation, more area of crops like gram, pulses, vegetables etc can be cultivated. The cost economics of wheat and gram was also explained to make the farmers understand that in case they do not have irrigation water, they can still do cultivation of gram, pulses etc.

Regarding the current practices of irrigation, it was pointed out that the system prevalent in the area is that of flood irrigation. But application of more water than required can be harmful to the plants. The example of wheat was quoted. The farmers agreed that with more water, wheat becomes yellow. So, in order to meet the irrigation requirement and to save water, the methods like sprinkler and drip irrigation may be adopted by the farmers.

Spinkler irrigation system at KVK, Hazaribag

The farm of the KVK was of 25 acres. In this entire farm, agriculture could be possible round the year only by the adoption of drip and sprinkler irrigation systems. There are only 2 wells

in the farm which are the only source of irrigation. He also explained that pots can be used instead of pipes for drip irrigation for cost effectiveness.

Users group members visiting the vermin compost in the KVK, Hazaribagh

He also informed that about the Govt. schemes that are running for promotion of drip and sprinkler irrigation systems. The process of getting the benefits was also explained. The interested farmers may get the application form from the Block Agriculture Officer and get it recommended through the KVK or the District Horticulture Officer. The subsidy offered is to the extent of 85%.

The importance of vermin compost was explained. The vermin compost has more nutritional value than the normal compost. It was informed that the interested farmers may get the worms from the KVK itself.

Then there was an interactive session where the problems of the farmers related to paddy cultivation were taken up by the Resource person. One of the farmers, Jaynath Mahto asked the solution to the paddy growing red in his field. It was told that 400 gm of carbaferon-3G should be mixed with soil or sand should be mixed in the soil of the paddy field.

For paddy becoming white, it was explained that the insect responsible for this could not swim in water. It creates hole in the leaves and sits there. It sucks the elements responsible for green color of the leaves and thus the leaves turn white. It gets transferred from one plant to other by cutting the leaves and thus making a kind of boat for itself which falls down and safely transmits the insect to some other plant. The first thing to control the spread of this disease is to drain the field. The insect can be destroyed by application of kerosene in the field. For this a rope is to be taken and immersed in kerosene oil. The oil can be applied by two persons holding the rope from end to end and spraying it in the field, shaking the plants. This causes the insect to fall down and the moment it falls down, it comes into contact with the kerosene oil which kills the insect.

Responding to the queries of farmers

Similarly many other questions and queries of the farmers were taken up.

4. MAJOR FINDINGS

The capacity building activities carried out under the present project was meant for the beneficiaries of the structures constructed under the Diversion based irrigation project. These beneficiaries have been constituted into user groups. The responsibility of maintaining the structures lies with the user groups.

The major findings observed are as follows:

For proper care and maintenance of the structures, the decision of the various user groups is different. However, the concrete shape of the mechanism is yet to be observed as most of the structures have been recently constructed and as such are in proper condition. Apart from that, most of the structures are dry due to less rainfall in this year. Thus irrigation could not be possible and cropped area is very less than the normal. The crop production is also severely affected due to the drought.

However, the majority of the user groups have decided to collect money from among themselves for repairing the structures when the need may arise. As far as water sharing and crop planning aspect is concerned, the mechanism could not be operational due to lack of water for irrigation. Despite that, the user group members have developed the understanding among themselves for water sharing for effective utilization. Thus for example, in village Karimati, the beneficiaries have decided to cultivate wheat from the existing water body to a limited extent due to less water available for irrigation. Similarly the beneficiaries of Chanaro Parwad have shared the water for optimum benefit. They are taking potato by irrigating from the pond constructed. The understanding developed is that the farmers who have taken crops this year/season will not take it in the next season/year. This way the benefits would go to every one in rotation.

Regarding the adoption of drip / sprinkler systems of irrigation, there is still a lot way to go. The beneficiaries are very reluctant to adopt these systems due to the initial investment in it and also due to the failure of such systems witnessed in their vicinity.

The SRI system of paddy cultivation has been understood by the community and they are now well aware of the benefits of the system. Initially we found it very difficult to convince the community about the advantage of the new method. They were having lots of apprehensions about the method. Some how we could convince a few farmers to do it in a portion of their land and let the rest of the land be covered under the traditional system. When these farmers started the sowing of paddy at the recommended distance, they were laughed at by the fellow members who suspected that the production of not only grains but the straws as well would suffer drastically by adopting the SRI. Later on after seeing the results, the same people repented for not having gone for SRI and they sworn in to do it the next time.

During the training session on SRI, 18 farmers from three villages, namely – Chanaro, Chanaro Parwad and Lothe expressed their interest to do SRI. However, due to lack of rainfall, most of them could not do it. 7 farmers from the village Chanaro have done SRI and they have obtained good results. The results have been tabulated as below:

Practical measurement of yield from SRI plots:

Sl.no	Name of farmer	Fathers name	Village	Khata no.	Plot no.	Area in acre	Yield per sq.m in kg	Yield per acre in kg
1	Fuleshwar Mahto	Kartik Mahto	Chanaro	68	817	0.5	1.85	7485.1
2	Dineshwar Mahto	Mulu Mahto	Chanaro	175	1209	0.45	2	8092
3	Rameshwar Mahto	Mulu Mahto	Chanaro	175	1209	0.45	1.35	5462.1
4	Basant Mahto	Late Aghnu Mahto	Chanaro	175	1209	0.4	1.65	6675.9
5	Girdhari Mahto	Kela Mahto	Chanaro	153	1941	0.5	1.75	7080.5
6	Meghlal Mahto	Sukhlal Mahto	Chanaro	153	1820	0.5	1.5	6069
7	Mahesh Mahto	Late Prabhu Mahto	Chanaro	69	520	0.25	1.9	7687.4

Grains of paddy collected per square meter from SRI (larger ones) and non SRI plots

Weighing the paddy from SRI and non SRI plots

Methodology:

A wooden square was prepared of area 1 sqm. It was placed in the field and all the plants within its periphery were harvested. It was then threshed and the grains separated from the straw. The grains and the straw were then measured. All the community members participated in the process.

Through this process, we had carried out the measurement of yield of paddy done through SRI method and compared it with the non SRI plots. **It has been observed that the paddy grown by the traditional method yields only 350 grams to 500 grams per square meter. The yield per sq.m of paddy grown through SRI method is more than 1500 grams on an average.** It is as high as 1800 grams in some cases.

The straw produced in SRI method is also three to four times more than that produced by the traditional method.

These results have been made known to the entire village community. In the words of the farmers, they are very surprised and encouraged by the results and would adopt this practice next year onwards. In the coming years, these findings would be tried to be spread in the entire project area.

5. CONCLUSIONS AND RECOMMENDATIONS:

The SRI method of paddy cultivation was undertaken by a few numbers of farmers and they have done it successfully. This activity has served as a practical demonstration for the entire communities who are now convinced about the new methodology and are ready to practice it in the next cropping season.

	
SRI - Ashok Mahto of Chanaro.	*SRI - Field of Prakash Mahto of Chanaro.*

This has wide implications in terms of the promotion of new technology and its acceptability by the community members. Based on the results obtained, it is easy to observe that the capacity building activities designed for farmers of rural areas should be followed by practical demonstration so as to make them feel it and also convincing about the results.

The other aspect is that the technology which is costlier and difficult to manage by the community is difficult to be adopted by them. It needs much effort to convince them regarding the utility of the technology proposed. For that demonstration plots must be included in any capacity building programme. Obviously, exposure can be an eye opener in some cases but doing oneself is much more reliable and it opens up the way for adoption by the community. Thus we see, for example, with regards to the adoption of drip or sprinkler system of irrigation, the farmers are not much serious or willing to adopt it. One aspect of this may be that the research and extension work carried by various research institutions or other agencies involved is not sufficient to enhance the acceptability of the technology by the farmers. The other aspect may be that the cost involved and the awareness level of the community plays a significant role in the adoption of any new technology.

Regarding the adoption of organic compost, it seems that the community is addicted to the use of chemical fertilizers and pesticides to an extent where a switch over to organic counterpart is something which cannot be expected in a short duration of time span. The farmers do however use the raw cow dung in their fields regularly. Intensive efforts are required to convince the utility and advantage of organic compost often requiring to go in a research mode, may be on a pilot basis to establish the facts which may then be promoted for wider acceptability.

6. IMPACT ON THE COMMUNITY

Following impacts can be observed at the community level:

The users groups are meeting to decide the modalities of water sharing on day to day basis. This year cultivation is possible only to a very limited extent due to severe shortage of rainfall in the monsoon season. In the structures like those constructed in village Karimati, Barwe*, Simra, Dasokhap* and Chanaro where there is some water available, the users groups are actively deciding the time and schedule of irrigation for different plots so that conflict does not happen due to less water availability. (*Note*: Although the project intended to cover only 8 villages, some of the neighboring villages which were already included under the Diversion based irrigation project also got involved in the training and the users group have been strengthened there by the trainings provided*).

The SRI system of paddy cultivation is understood by the community members and it is expected that more farmers would practice it in the next season. The farmers of the project villages are delighted to see the production of paddy enhancing by three to four times while the input cost has decreased.

Contributing factors for the promotion of SRI method of paddy cultivation:

- Paddy cultivation is common in the project villages undertaken.
- The farmers came to know that the new system does not involve any capital investment.
- Reduction in the application of seeds per acre thus reducing the input cost.
- The SRI system promised more production at lesser cost. This has attracted the farmers.

The farmers have not started preparing the compost on their own. The reasons may be the following:

- The farmers reflect the non availability of time and manpower for preparing the compost. They are engaged in activities which would bring instant income for them.
- They find it much easier to apply the chemical fertilizer which is readily available.

These will be tried to be addressed in future.

Similarly the non adoption of the drip / sprinkler system of irrigation can be attributed to the following reasons:

- High initial investment for getting the system installed at their fields
- Lack of confidence regarding the care and maintenance of the system
- Lack of willingness to go for loan component to get the system installed due to prior adverse experience with banks / financial institutions.